FOR REFERENCE ONLY

SOLENOID VALVE

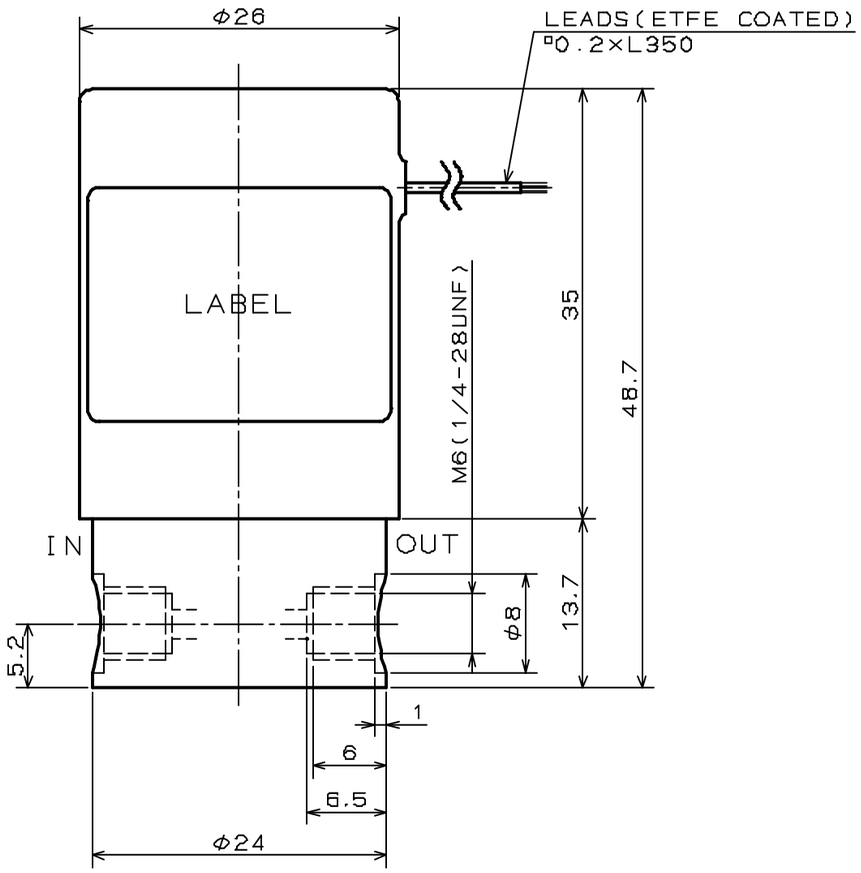

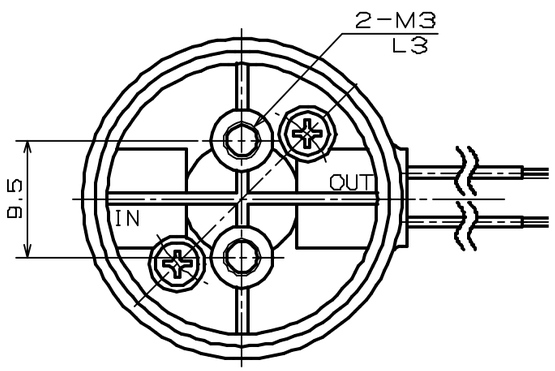

SPECIFICATIONS for MODEL MCV-2R-NM6(1/4U)F

ORIFICE DIAMETER	: 2mm
PORT CONNECTION	: M6、1/4-28UNF
OPERATING PRESSURE RANGE	: INLET -27 ~ 100kPa {-200mmHg ~ 0.5bar}
	OUTLET 0 ~ 50kPa {0 ~ 0.5bar}
FLUID MEDIA	: FLUIDS CHEMICALLY COMPATIBLE WITH MATERIALS BELOW
MEDIA TEMPERATURE RANGE	: 0 ~ 60℃
AMBIENT TEMPERATURE RANGE	: 0 ~ 60℃
RATED VOLTAGE	: 12、24、90VDC 100VAC(50/60Hz)SILICON RECTIFIER ATTACHED
POWER CONSUMPTION	: 2.6W(90VDC、100VAC : 3.5W)
DUTY CYCLE	: CONTINUOUS
COIL TEMPERATURE INCREASE	: MAX 50℃ FROM ROOM TEMPERATURE (90VDC、100VAC : 60℃)
INSULATION CLASS	: CLASS B
DIELECTRIC STRENGTH	: 1500VAC / 60s

NOTE

PART NUMBER	PORT CONNECTION
MCV-2R-NM6F	M6
MCV-2R-N1/4UF	1/4-28UNF

WETTED MATERIALS

SYM.	DATE	DESCRIPTION	PART NO	PART NAME	MATERIAL	REQD.	NOTE
△							
△							
△			2	DIAPHRAGM	FPM	1	
			1	VALVE BODY	PPS	1	

REVISION

SCALE	APPROVED	CHECKED	DRAWN		
2/1 A3				SOLENOID VALVE MCV-2R-NM6(1/4U)F	DRAWING NO 967081-00-S

TAKASAGO ELECTRIC INC MIDORIKU. NAGOYA. JAPAN

2006- 2-27